KZS-2M2p EDI A C16/0.03

Specificatii

Cod ETI	002172416
Descriere	KZS-2M2p EDI A C16/0.03
Denumire clasă	Diferen ial RCBO
Capacitatea de rupere (kA)	10
Caracteristică de întrerupere	C
Curent nominal (A)	16
Tip	A
Curent de defect nominal (A)	0.03
Tip curent	A
Tensiunea nominală(V)	230
Număr de poli	2
Frecven ă nominală (Hz)	50/60 Hz
Standarde	IEC 61009
Sec iune transversală nominală	1-25

Pagina de produse online

Alta documentatie

Catalog caracteristici tehnice
Model 3D
Manual de instructiuni
Declaratie CE
Eplan muşchi

ETIM clasificare internationala

Clasificare	EC000905
Denumire clasă	Earth leakage circuit breaker
Number of poles (total)	2
Number of protected poles	2
Rated voltage	230V
Rated current	16A
Rated fault current	0,03A
Leakage current type	A
Current limiting class	3
Rated short-circuit breaking capacity according to EN 61009	10kA
Voltage type	AC
Frequency	50 Hz
Release characteristic	C
Concurrently switching neutral conductor	1
Over voltage category	3
Ambient temperature during operating	-25...40°C
Width in number of modular spacings	2
Built-in depth	69mm
Degree of protection (IP)	IP20
Connectable conductor cross section solid-core	1...25mm²
Connectable conductor cross section multi-wired	1...25mm²

Desen cotat

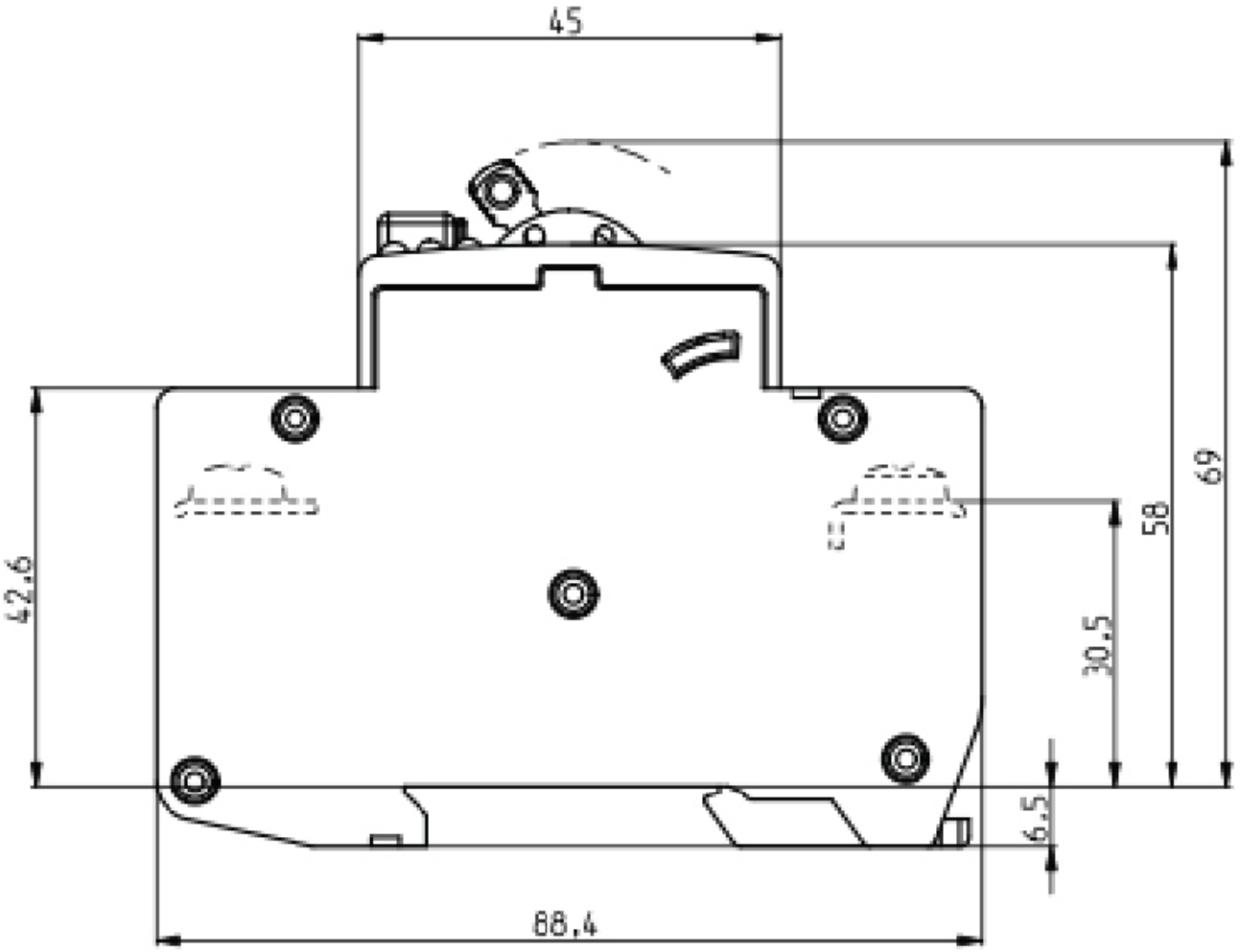
45
69
58
30,5
42,6
6,5
88,4

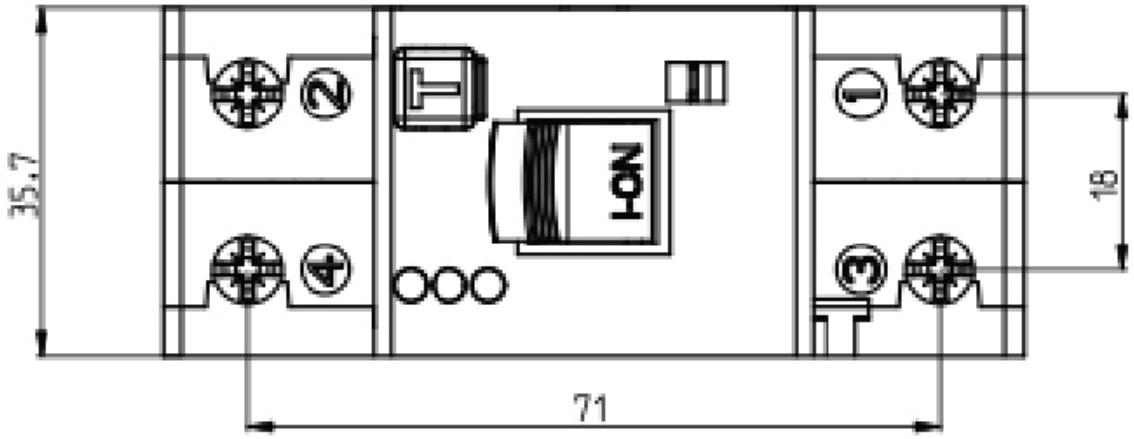
35,7
18
71
ON
1
2
3
4
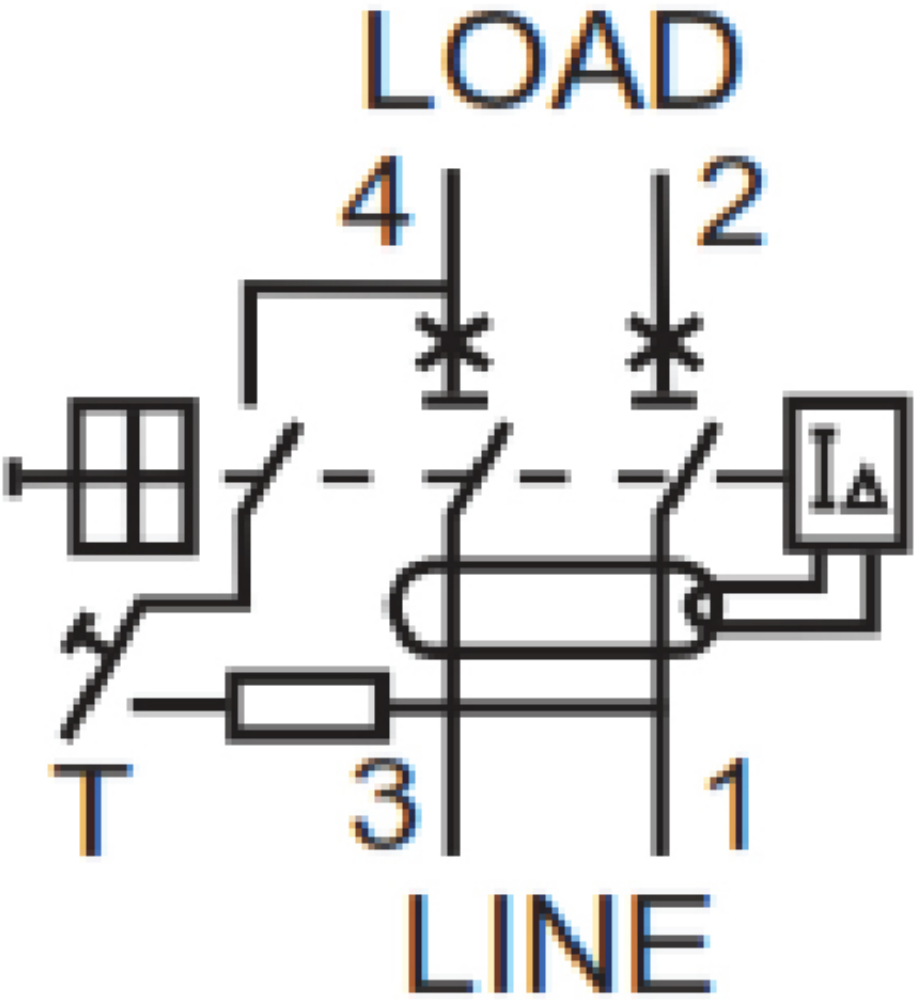
Simbol/Conexiune